MALE END VIEW	FEMALE END VIEW
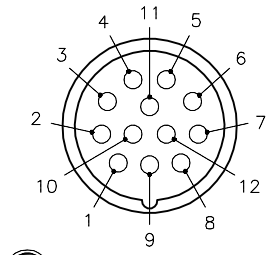	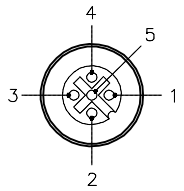
M23 connector (P1)	euro fast. (J1–J4)

SPECIFICATIONS

HOUSING MATERIAL/COLOR	NYLON/BLACK
RECEPTACLE MATERIAL/FINISH	STAINLESS STEEL/PASSIVATED
CONTACT CARRIER MATERIAL	NYLON
CONTACT MATERIAL/PLATING	BRASS/GOLD
O–RING MATERIAL	FKM/FPM
OPERATING VOLTAGE [V]	250 VDC
OPERATING CURRENT [A]	4.0 AMPS/SIGNAL, 9.0 AMPS TOTAL
PROTECTION CLASS	IP67,IP69K; ONLY WHEN ALL RECEPTACLES ARE COVERED WITH PLUGS OR CONNECTED
OPERATING TEMPERATURE	–40˚C to +85˚C (–40˚F to +185˚F)

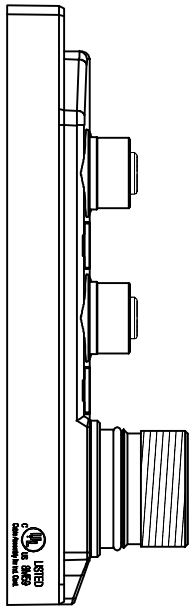

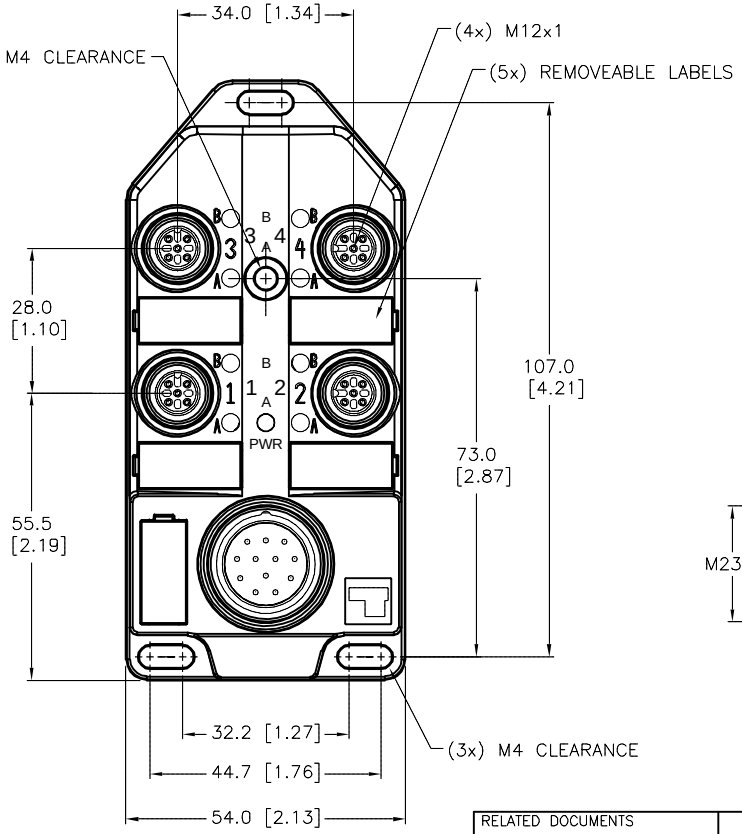

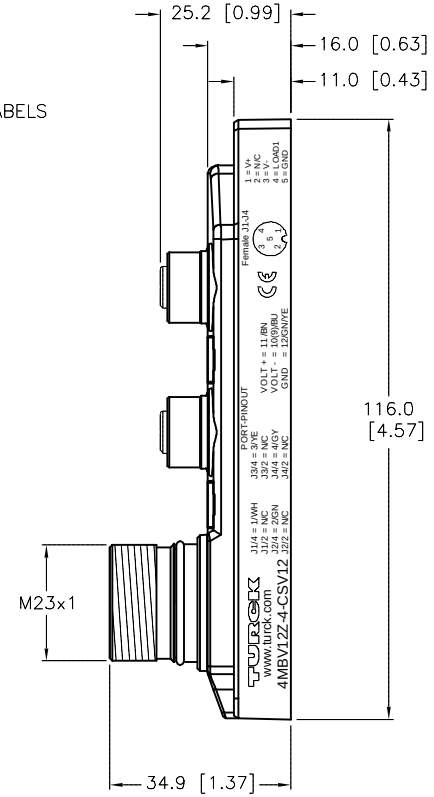

WIRING DIAGRAM

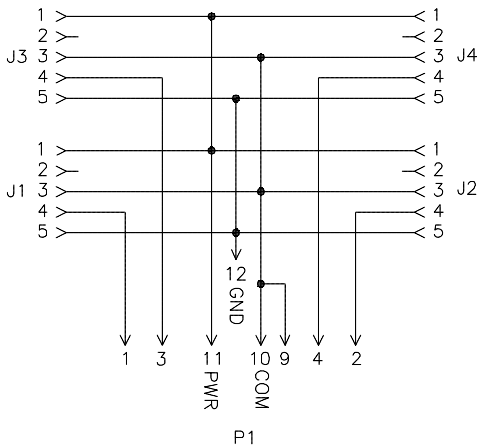

SOURCE DRAWING - FOR REFERENCE ONLY

RELATED DOCUMENTS	3RD ANGLE PROJECTION	THIS DRAWING IS CONFIDENTIAL AND THE PROPERTY OF TURCK INC. USE OF THIS DOCUMENT WITHOUT WRITTEN PERMISSION IS PROHIBITED.	TURCK	3000 CAMPUS DRIVE MINNEAPOLIS, MN 55441 1–800–544–7769 (763) 553–7300 (763) 553–0708 fax www.turck.us
1. 2. 3. 4.				
MATERIAL: SEE SPECIFICATIONS	ALL DIMENSIONS DISPLAYED ON THIS DRAWING ARE FOR REFERENCE ONLY	DRFT: NF	DATE: 12/06/19	DESCRIPTION: 4MBV12Z–4–CSV12
		APVD: L.F.	SCALE: 1=1.5	
FINISH: SEE SPECIFICATIONS	CONTACT TURCK FOR MORE INFORMATION	UNIT OF MEASUREMENT: **MILLIMETER [INCH]**		IDENTIFICATION NO.: 100015021 — REV: A
		DO NOT SCALE THIS DRAWING		FILE: 100015021 — SHEET 1 OF 1

REV	DESCRIPTION	BY	DATE	ECO NO.
A	DRAWING RELEASE	ER	12/11/19	

Approved 12/09/2019, work order #204285 by L.F.